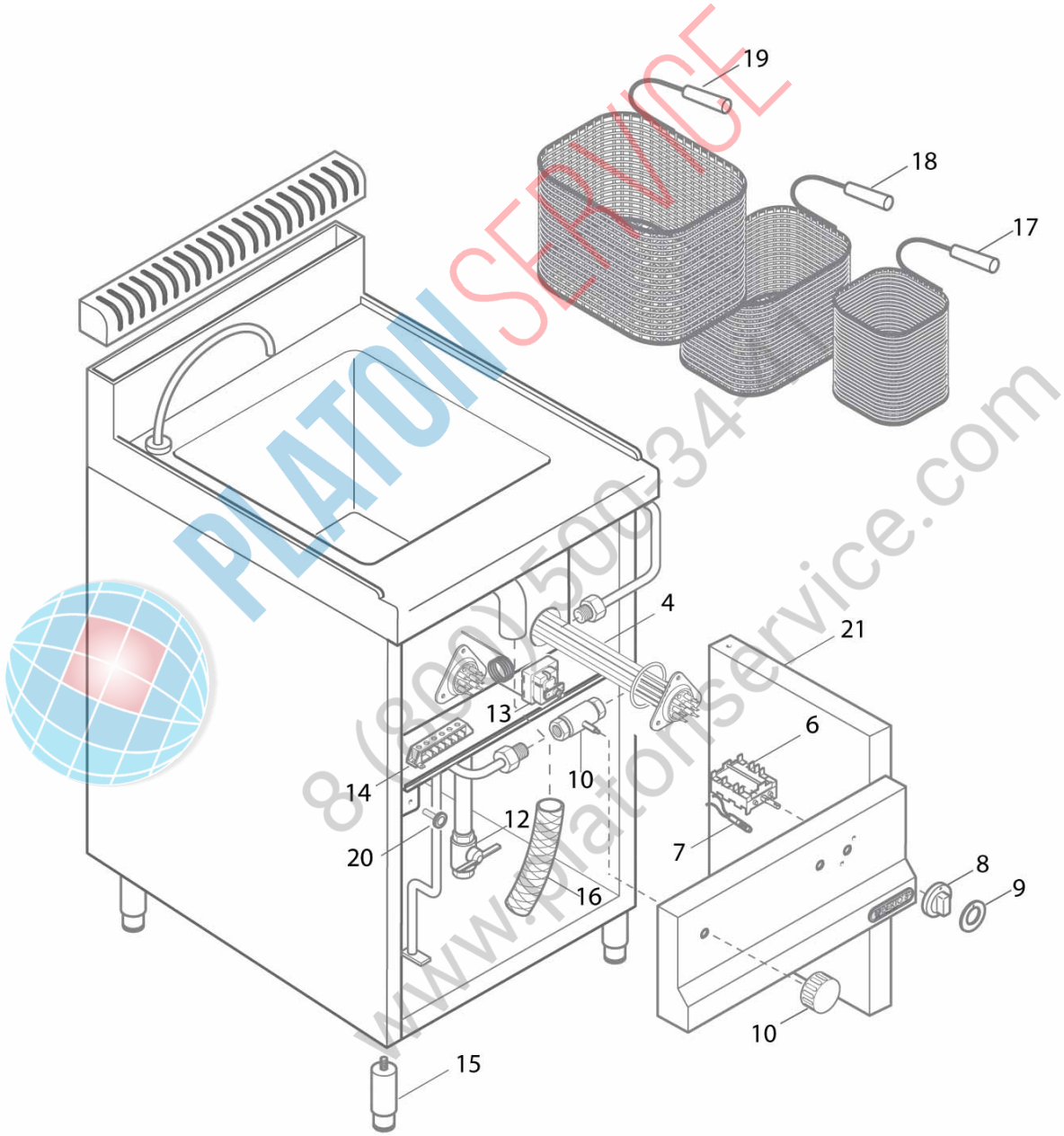

PLATONSERVICE
8 (800) 500-34
www.platonservice.com

Pos. Item	Codice Code	Descrizione	Item Description	Designation articles	Artikelbeschreibung	Decripciòn artìculos	N° pezzi - No. pieces					
												E9CP40
4	35021600	Resist. 5000w-230v e9cp40 serie 900	Resist. 5000w-230v - e9cp40 s.900	Resis. 5000w-230v - e9cp40 s.900	Wide. 5000w-230v - e9cp40 s.900	Resi. 5000w-230v - e9cp40 s.900						2
6	22049800	Comm. per fe 2/1-cpe40/e9cp40	Selector - cpe40/e9cp40	Commutateur - cpe40/e9cp40	Umschalter - cpe40/e9cp40	Conmutador - cpe40/e9cp40						1
7	33171000	Spia giallo/verde 400v d.10mm	Yello. pilot light 400v d.10mm	TÉmoin lumineux jaune/vert 400v	Gelb/grÜne rundanzeige 400v	Ind. lumin. amarillo/verde 400v						1
8	35877300	Man. rossa p. 6x4,6 a 180°ral3000	Red knob p. 6x4,6 a 180°ral3000	Ma. rouge p. 6x4,6 a 180°ral3000	Drehknopf p. 6x4,6 a 180°ral3000	Mando rojo p. 6x4,6 a 180°ral3000						1
8	35876300	Manopola rossa p. 6x4,6 a 180°	Red knob 6x4,6 180° c	Manette rouge 6x4,6 180° c	Drehknopf 6x4,6 180° c	Mando rojo 6x4,6 180° c						1
9	31953000	Serig. rossa manop. cuoc. elettrico	Electric knob serigraphy	Serigraphie manette electr.	Rot aufdruck	Serigrafia mando electr.						1
10	31686800	Valvola sfera man. ghiera 1/2 f-f	Water inlet valve	Soupape entree d'eau	Wasser-einlassventil	Valvula de bola						1
12	35686300	Rubin. scarico da 1	1" outlet tap - g9cp40/80	Robinet de vidange 1" - g9cp40/80	Abflusshahn 1" - g9cp40/80	Grifo de descarga 1" - g9cp40/80						1
13	36062400	Termost. trif. sicur. 150°c	Safety thermost.150°c	Thermost.de surete 150°c	Sicherheitsthermost. 150°c	Termost.de seguridad 150°c						1
14	30184200	Morsettiera a 6 poli fv 122 b (lau 10)	Terminal board 6 poles	Bornier 6 poles	Klemmenleiste	Bornera 6 polos						1
15	24684500	Piedino inox 2 h-125/175	Foot 2 h-125/175	Pied 2 h-125/175	Stellfuss 2 h-125/175	Pata 2 h-125/175						4
16	35987700	Tubo gomma scarico vasca	Water inlet pipe	Tube d'eau	Wasserzulaufrohr	Tubo cargo agua						1
17	31614900	Cesto 1/6 120x105x240 h	Basket 1/6 120x105x240 h	Panier 1/6 120x105x240 h	Korb 1/6 120x105x240 h	Cesta 1/6 120x105x240 h						6
18	31613800	Cesto 1/3 290x105x200 h	Basket 1/3 290x105x200 h	Panier 1/3 290x105x200 h	Korb 1/3 290x105x200 h	Cesta 1/3 290x105x200 h						3
19	31614700	Cesto 1/1 250x330x240 h	Basket 1/1 250x330x240 h	Panier 1/1 250x330x240 h	Korb 1/1 250x330x240 h	Cesta 1/1 250x330x240 h						1
20	32583800	Chiusura magnetica	Magnetic closure	Fermeture magnetique	Megnetverschluss	Cierre magnetico						1
21	35956000	Sport. compl. da 400	Com. door 400mm "berto's" s.900	Porte com. 400mm. "berto's" s.900	Ko. fuer 400mm. "berto's" s.900	Pu. completa 400mm. "berto's" s.900						1

PLATON SERVICE
8 (800) 500 14 41
www.platonservice.com